K9□H40N□ + K9H□BTH

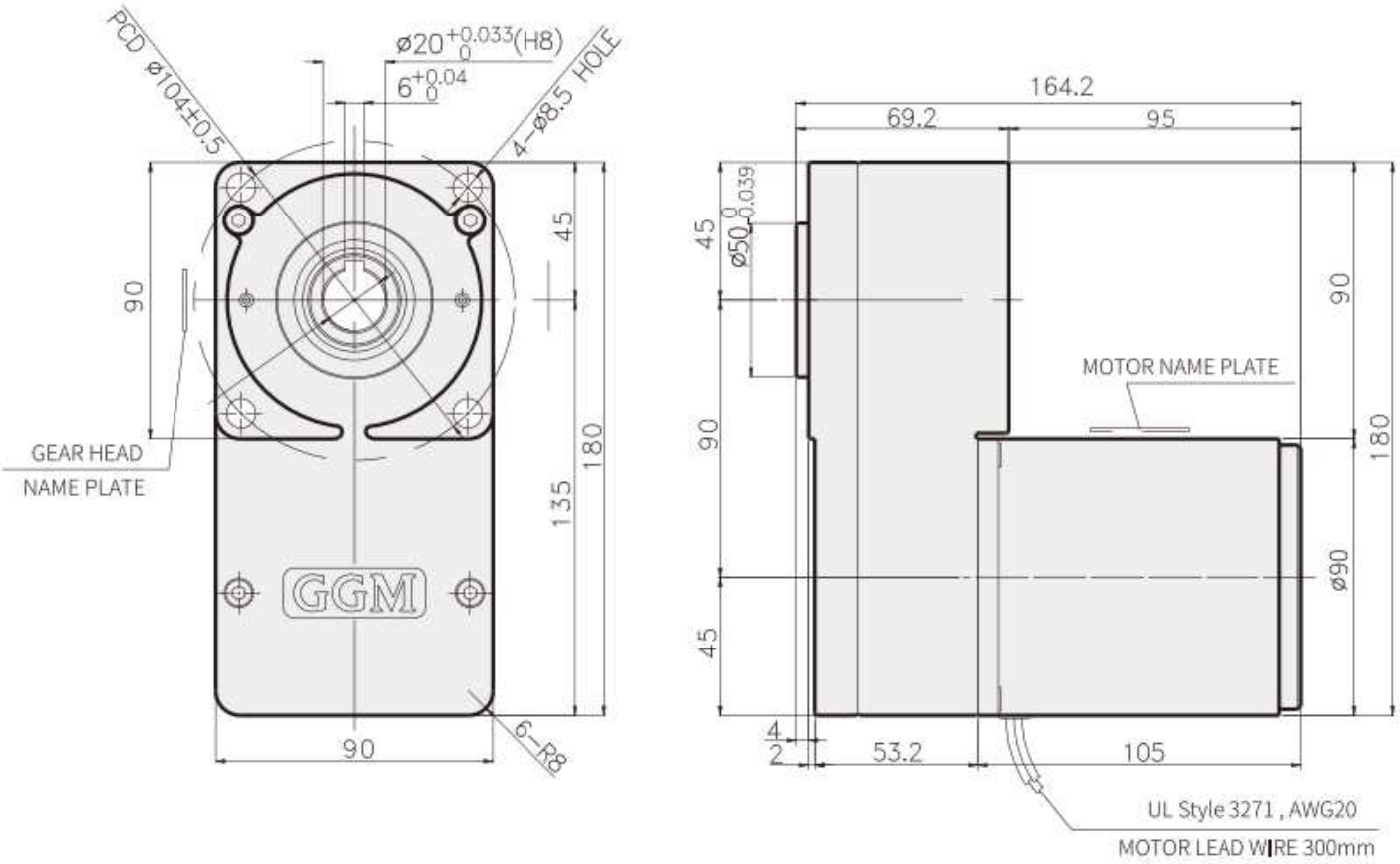

WEIGHT

PART	WEIGHT(kg)
MOTOR	2.36
GEARHEAD	2.20

○ KEY

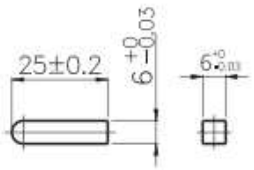
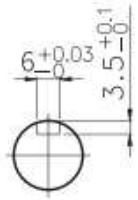
○ KEY GROOVE