GEARHEAD

DIMENSIONS

K9□H60F□ + K9H□BTH

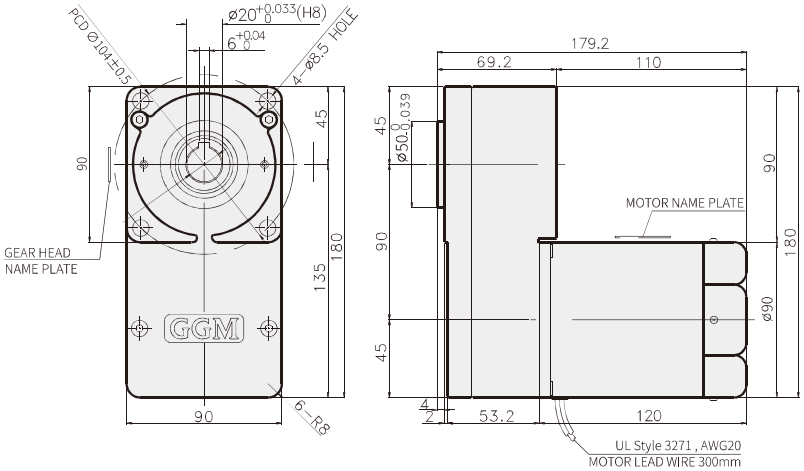

WEIGHT

PART	WEIGHT(kg)
MOTOR	2.50
GEARHEAD	2.20

○ KEY

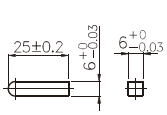

○ KEY GROOVE

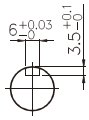

K9□H90F□ + K9H□BTH

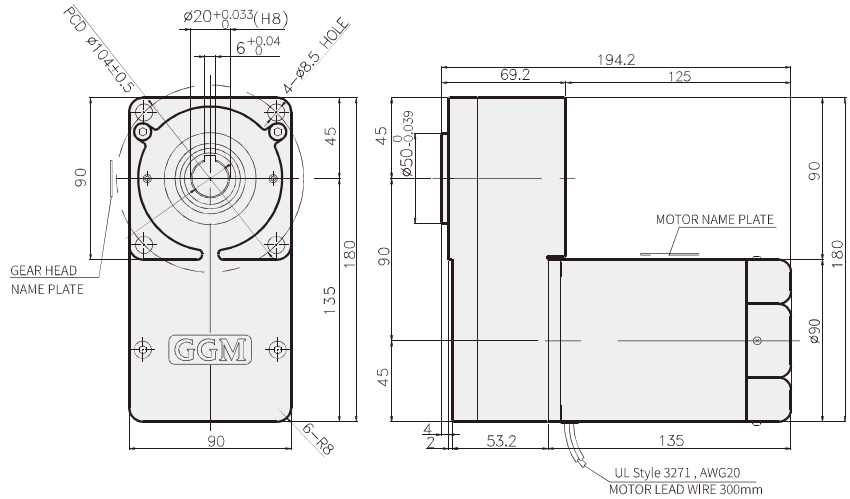

WEIGHT

PART	WEIGHT(kg)
MOTOR	3.00
GEARHEAD	2.20

○ KEY

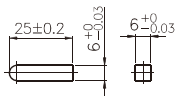

○ KEY GROOVE

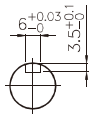

K9□H180F□ K9□H200F□ + K9H□BTH

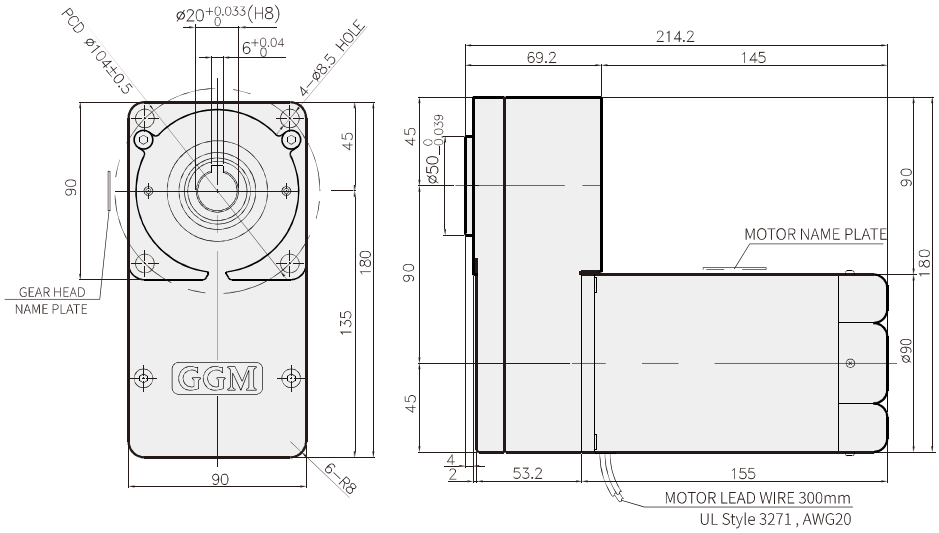

WEIGHT

PART	WEIGHT(kg)
MOTOR	3.72
GEARHEAD	2.20

○ KEY

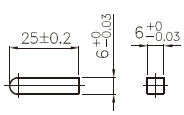
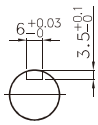
○ KEY GROOVE